PRODUCED BY AN AUTODESK STUDENT VERSION

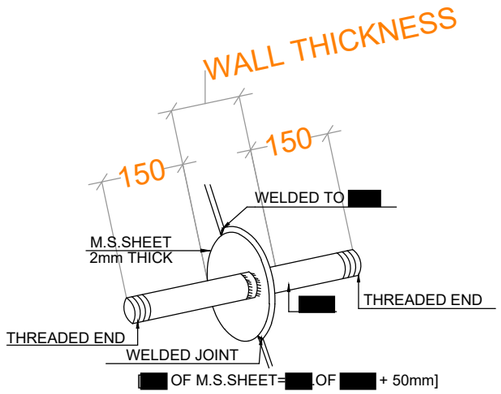

[redacted] INSERT

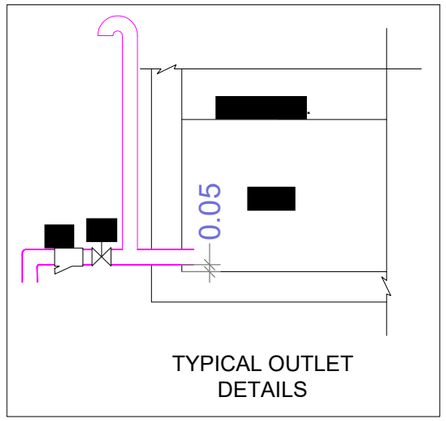

TYPICAL OUTLET DETAILS

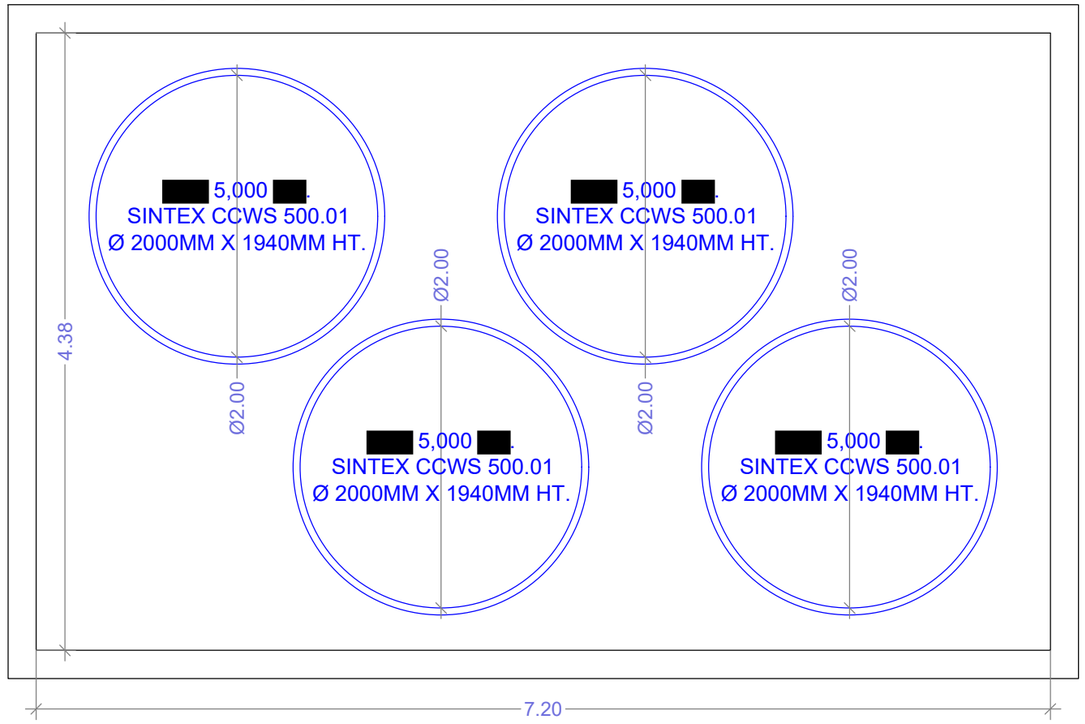

O.H.T. PLAN FOR PHASE - 1

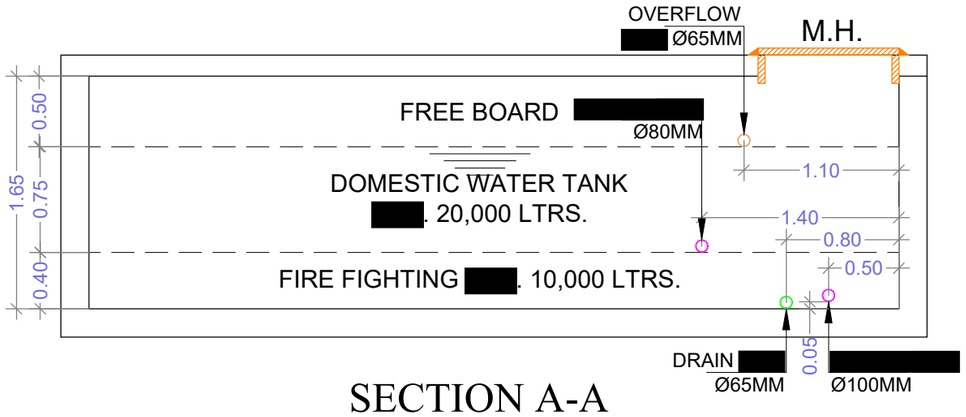

SECTION A-A

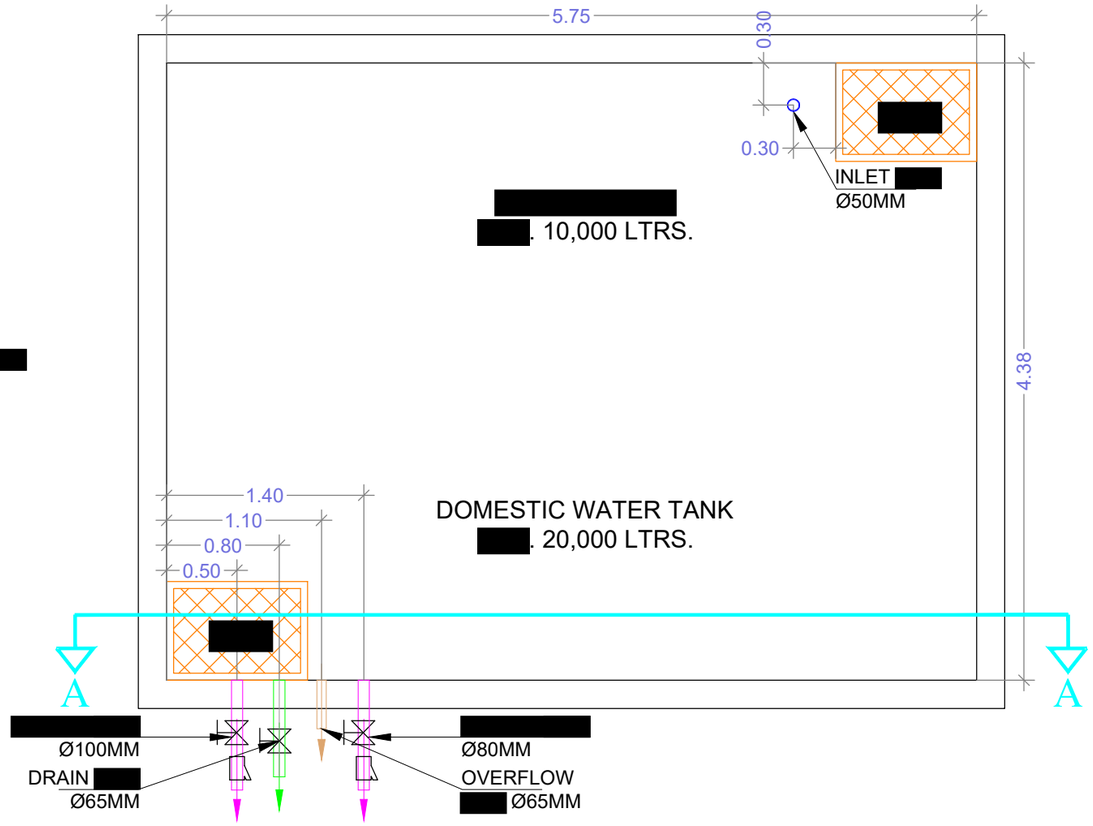

O.H.T. PLAN FOR ULTIMATE STAGE

DRG NO.	M/167/06	01/01
	R1	

STAMP & SIGNATURE

McLIN Consultants Pvt. Ltd. FOR APPROVAL Pune-30

NOTES:

	PUMPING MAIN
	OVERFLOW [redacted]
	[redacted]
	DRAIN [redacted]
	BALL VALVE (BV)
	STRAINER (ST)
	MANHOLE 600 X 900 mm.

[redacted] PLAN

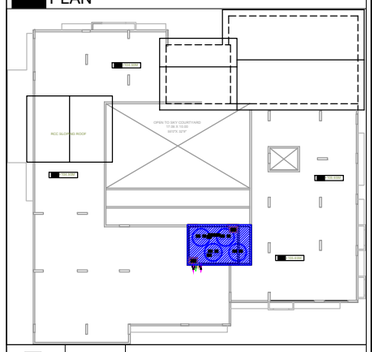

[redacted]		
[redacted]		
[redacted]		
[redacted]		
[redacted]	26.03.21	REVISED AS PER ARCH. LAYOUT
[redacted]	[redacted]	[redacted]
[redacted]		

[redacted] OVERHEAD WATER TANK DETAILS

[redacted]

McLIN CONSULTANTS PVT.LTD.
[redacted] IN PLUMBING AND ENVIRONMENTAL ENGINEERING
[redacted] 5, [redacted]
Pune - 411 030 Tel - 2432 0010
e-mail - [redacted]

[redacted] MR. SUBHASH LELE

[redacted] INDESIGN ARCHITECTS

NORTH	DATE:-	26.11.2019
	DRAWN BY	PANKAJ G.
	CHECKED BY	MOHANISH P.
SCALE:-NTS	APPROVED BY	MOHANISH P.

[redacted] Plumbing Drawings (1)\ARC Details 26.03.21.dwg
Plumbing Drawings\R1 [redacted]

PRODUCED BY AN AUTODESK STUDENT VERSION
PRODUCED BY AN AUTODESK STUDENT VERSION
PRODUCED BY AN AUTODESK STUDENT VERSION